Work Order ID 155142

Monday, January 09, 2017 11:29:53 AM

155142

Item ID: D350-604-041
Revision ID: URF 16-567
Item Name: Rear Locker Extender

Accept *N900040100*

Setup Start *NS1*
Stop *NS2*

Start Date: 8/1/2017 **Start Qty:** 1.00 *1*
Required Date: 9/1/2017 **Req'd Qty:** 1.00 *1*
Reference:

DAS 21 9-89

Cust Item ID:
Customer:

Approvals: **Process Plan:** DAS 21 9-89 **Date:** JAN 1 2 2017 **Tooling:** _____ **Date:** _____
QC: _____ **Date:** _____ **SPC (Y/N):** _____ **Date:** _____

Run Start *NR1*
Stop *NR2*

Sequence ID/ Work Center ID	Operation Description	Set Up/ Run Hours	Tool ID	Tool #	Plan Code	Accept Qty	Reject Qty	Reject Number	Insp. Stamp

Draw Nbr	Revision Nbr
D2273	~~L U/R~~ M 07/01/12
D350-604-041	~~C U/R~~ 11/1/13

100 — Document Control — 0.00
100
DC
DOCUMENT CONTROL

Doc.Control -USB or Paperwork

Memo 0.00
Photocopy bluefile and create labels per PPP D350-604-041
CHG009 CHG010 DAS 21 9-89 See attachment

DAS 27 9-89
SEP 2 1 2017

110 — 0.00
110
Purchasing
PURCHASING

Purchasing

Memo 0.00
Issue P/O: 34974
Description: D350-604-041 Rear locker extender.
Manufacture as per dwg D2273
Supplier: FDC Composites Inc.
Certification of Conformity and process sheet required.

EXTREME CARE MUST BE TAKEN TO PROTECT THE SURFACES OF THE REAR LOCKER. THE SURFACES MUST BE SMOOTH AND FREE FROM SURFACE DEFECTS SUCH AS SCRATCHES, NICKS, OR DENTS.

MUST BE WELL PACKAGE, IF NOT IT WILL BE REFUSE

1 JAN 1 7 2017 DAS 13 9-89

DART AEROSPACE

DQA: _____ Date: _____

WORK ORDER NON-CONFORMANCE / UPDATE

QA Closed: Date:

Work Order update only ☐

Work Order: _____ Part No. _____ NCR No.	**DISPOSITION** Rework ☐ Scrap ☐ Use-as-is ☐ Suspected Unapproved ☐	**AGAINST DEPARTMENT/PROCESS** Skid-tube ☐ Cross tube ☐ Water Jet ☐ Engineering ☐ Machining ☐ Small Fab ☐ Prod. Eng. Coor. ☐ Quality ☐ Thermoforming ☐ Finishing ☐ Rec/Store/Packaging ☐ Other ☐ Large Fab ☐ Composite ☐ Supplier ☐

Date :	Step #:	QTY Effective :	MRB (QSI042) Approval

Description Work Order Deviation	Disposition	
		Completed By
		Lead hand / Supervisor Approval Verification
		QC / QA Coordinator Approval

Root Cause				FAULT CATEGORY			
Environment	☐	☐	No Re-verification	☐ Pressure/Forced	☐ Temperature/Cure	☐ Power Loss/Surge	☐ Positioned Wrong
Design	☐	☐	Operator	☐ Bending	☐ Set-up	☐ Folio/Program	☐ Outside Dimensions
Doc/Data	☐	☐	Offset/Setup	☐ Centre Not Concentric	☐ BOM/Route	☐ Grain	☐ Over/Under tolerance
Equip/Tooling	☐	☐	Supplier	☐ Cracks	☐ Broken/Damage/Defect	☐ Weld	☐ Part Incorrect
Handling/Pre	☐	☐	Training	☐ Crimp/Kink/Ripple/Wave	☐ Inspection Incomplete/Unqualified	☐ Wrong Stock Pulled	☐ Part Lost/Missing
Material	☐	☐	Use for Testing	☐ Cuffs	☐ Contamination	☐ Out of Sequence	☐ Part Moved
Internal Transport	☐	☐	Poor Information	☐ Crushing	☐ Countersink	☐ Off-set	☐ Drawing
Tribal Knowledge	☐	☐	Rushing	☐ Heat Treat	☐ Cut Too Short	☐ Mislabeled	☐ Finish
LOA	☐	☐	Product Improvement	☐ Wave/Twist in Tube	☐ Instructions Incomplete/Unclear	☐ Fit/Function	☐ Misread
Substation	☐	☐	Process Improvement	☐ Marks/Chatter	☐ Drill Holes	☐ Misaligned/off center	☐ Turning Sequence
Past Expiry Date	☐	☐	Manufacturing Process				
Misidentified	☐	☐	Past Due	☐ OTHER :			

Work Order ID 155142 *155142*

Monday, January 09, 2017 11:29:53 AM

Item ID: D350-604-041 **Accept** *N900040100* **Setup Start** *NS1*

Revision ID: URF 16-567 **Stop** *NS2*

Item Name: Rear Locker Extender

Start Date: 8/1/2017 **Start Qty:** 1.00 *1* **Cust Item ID:**

Required Date: 9/1/2017 **Req'd Qty:** 1.00 *1* **Customer:**

Reference:

Run Start *NR1*

Approvals: **Process Plan:** _____ **Date:** _____ **Tooling:** _____ **Date:** _____

Stop *NR2*

QC: _____ **Date:** _____ **SPC (Y/N):** _____ **Date:** _____

Sequence ID/ Work Center ID	Operation Description	Set Up/ Run Hours	Tool ID	Tool #	Plan Code	Accept Qty	Reject Qty	Reject Number	Insp. Stamp
120	Receive & Inspect for Damage & Mat'l Certs	0.00							
120	Packaging								
Packaging	**Memo**	0.00				1x	SPN	9-18	
Packaging	Ensure a copy of Certification of Conformity and process sheet from Carbon-by-Design is attached. ***DO NOT STACK REAR LOCKERS OR ANYTHING ON THEM***								
130	QC6- Inspect dimensions to drawing	0.00							DAS 16 9-89
130									
QC	**Memo**	0.00							17/09/20
Quality Control	Check hole locations to template. DT 8824 Check process sheet and audit.								
140		0.00							
140									
Small Fab	**Memo**	0.05							
Small Fab	1- INSTALL DECALS AS PER DWG								

DAS 28 9-89 SEP 2 1 2017

DART AEROSPACE

DQA: _____ Date: _____

WORK ORDER NON-CONFORMANCE / UPDATE

QA Closed: Date: Work Order update only ☐

Work Order: _____ Part No. _____ NCR No.	**DISPOSITION** Rework ☐ Scrap ☐ Use-as-is ☐ Suspected Unapproved ☐	**AGAINST DEPARTMENT/PROCESS** Skid-tube ☐ Cross tube ☐ Water Jet ☐ Engineering ☐ Machining ☐ Small Fab ☐ Prod. Eng. Coor. ☐ Quality ☐ Thermoforming ☐ Finishing ☐ Rec/Store/Packaging ☐ Other ☐ Large Fab ☐ Composite ☐ Supplier ☐

Date :	Step #:	QTY Effective :	**MRB (QSI042) Approval**
Description Work Order Deviation		**Disposition**	
			Completed By
			Lead hand / Supervisor Approval Verification
			QC / QA Coordinator Approval

Root Cause				**FAULT CATEGORY**			
Environment	☐	☐	No Re-verification	☐ Pressure/Forced	☐ Temperature/Cure	☐ Power Loss/Surge	☐ Positioned Wrong
Design	☐	☐	Operator	☐ Bending	☐ Set-up	☐ Folio/Program	☐ Outside Dimensions
Doc/Data	☐	☐	Offset/Setup	☐ Centre Not Concentric	☐ BOM/Route	☐ Grain	☐ Over/Under tolerance
Equip/Tooling	☐	☐	Supplier	☐ Cracks	☐ Broken/Damage/Defect	☐ Weld	☐ Part Incorrect
Handling/Pre	☐	☐	Training	☐ Crimp/Kink/Ripple/Wave	☐ Inspection Incomplete/Unqualified	☐ Wrong Stock Pulled	☐ Part Lost/Missing
Material	☐	☐	Use for Testing	☐ Cuffs	☐ Contamination	☐ Out of Sequence	☐ Part Moved
Internal Transport	☐	☐	Poor Information	☐ Crushing	☐ Countersink	☐ Off-set	☐ Drawing
Tribal Knowledge	☐	☐	Rushing	☐ Heat Treat	☐ Cut Too Short	☐ Mislabeled	☐ Finish
LOA	☐	☐	Product Improvement	☐ Wave/Twist in Tube	☐ Instructions Incomplete/Unclear	☐ Fit/Function	☐ Misread
Substation	☐	☐	Process Improvement	☐ Marks/Chatter	☐ Drill Holes	☐ Misaligned/off center	☐ Turning Sequence
Past Expiry Date	☐	☐	Manufacturing Process				
Misidentified	☐	☐	Past Due	☐ OTHER :			

Work Order ID 155142

Monday, January 09, 2017 11:29:53 AM

155142

Item ID: D350-604-041
Revision ID: URF 16-567
Item Name: Rear Locker Extender

Accept *N9000040100*

Setup Start *NS1*
Stop *NS2*

Start Date: 8/1/2017 **Start Qty:** 1.00 *1*
Required Date: 9/1/2017 **Req'd Qty:** 1.00 *1*
Reference:

Cust Item ID:
Customer:

Approvals: **Process Plan:** _____ **Date:** _____ **Tooling:** _____ **Date:** _____
QC: _____ **Date:** _____ **SPC (Y/N):** _____ **Date:** _____

Run Start *NR1*
Stop *NR2*

Sequence ID/ Work Center ID	Operation Description	Set Up/ Run Hours	Tool ID	Tool #	Plan Code	Accept Qty	Reject Qty	Reject Number	Insp. Stamp
150	QC5- Inspect part completeness to step on W/O	0.00							
150 QC Quality Control	**Memo**	0.00				DAS 27 9-89 SEP 2 1 2017			
155	Pick Kit	0.00							
155 Packaging Packaging	**Memo** ***DO NOT STACK REAR LOCKERS OR ANYTHING ON THEM***	0.00				SEP 2 1 2017			DAS 28 9-89
158	QC4- 100% Inspect kits for completeness	0.00							
158 QC Quality Control	**Memo**	0.01				DAS 27 9-89 SEP 2 1 2017			

DART AEROSPACE

DQA: _____ Date: _____

WORK ORDER NON-CONFORMANCE / UPDATE

QA Closed: Date:

Work Order update only ☐

Work Order: _____ Part No. _____ NCR No.	**DISPOSITION** Rework ☐ Scrap ☐ Use-as-is ☐ Suspected Unapproved ☐	**AGAINST DEPARTMENT/PROCESS** Skid-tube ☐ Cross tube ☐ Water Jet ☐ Engineering ☐ Machining ☐ Small Fab ☐ Prod. Eng. Coor. ☐ Quality ☐ Thermoforming ☐ Finishing ☐ Rec/Store/Packaging ☐ Other ☐ Large Fab ☐ Composite ☐ Supplier ☐

Date :	Step #:	QTY Effective :	**MRB (QSI042) Approval**

Description Work Order Deviation	**Disposition**	
		Completed By
		Lead hand / Supervisor Approval Verification
		QC / QA Coordinator Approval

Root Cause				**FAULT CATEGORY**			
Environment	☐	☐	No Re-verfication	☐ Pressure/Forced	☐ Temperature/Cure	☐ Power Loss/Surge	☐ Positioned Wrong
Design	☐	☐	Operator	☐ Bending	☐ Set-up	☐ Folio/Program	☐ Outside Dimensions
Doc/Data	☐	☐	Offset/Setup	☐ Centre Not Concentric	☐ BOM/Route	☐ Grain	☐ Over/Under tolerance
Equip/Tooling	☐	☐	Supplier	☐ Cracks	☐ Broken/Damage/Defect	☐ Weld	☐ Part Incorrect
Handling/Pre	☐	☐	Training	☐ Crimp/Kink/Ripple/Wave	☐ Inspection Incomplete/Unqualified	☐ Wrong Stock Pulled	☐ Part Lost/Missing
Material	☐	☐	Use for Testing	☐ Cuffs	☐ Contamination	☐ Out of Sequence	☐ Part Moved
Internal Transport	☐	☐	Poor Information	☐ Crushing	☐ Countersink	☐ Off-set	☐ Drawing
Tribal Knowledge	☐	☐	Rushing	☐ Heat Treat	☐ Cut Too Short	☐ Mislabeled	☐ Finish
LOA	☐	☐	Product Improvement	☐ Wave/Twist in Tube	☐ Instructions Incomplete/Unclear	☐ Fit/Function	☐ Misread
Substation	☐	☐	Process Improvement	☐ Marks/Chatter	☐ Drill Holes	☐ Misaligned/off center	☐ Turning Sequence
Past Expiry Date	☐	☐	Manufacturing Process				
Misidentified	☐	☐	Past Due	☐ OTHER :			

Work Order ID 155142
Monday, January 09, 2017 11:29:53 AM

155142

Item ID: D350-604-041
Revision ID: URF 16-567
Item Name: Rear Locker Extender

Accept *N9000040100*

Setup Start *NS1*
Stop *NS2*

Start Date: 8/1/2017 **Start Qty:** 1.00 *1*
Required Date: 9/1/2017 **Req'd Qty:** 1.00 *1*
Reference:

Cust Item ID:
Customer:

Approvals: **Process Plan:** _____ **Date:** _____ **Tooling:** _____ **Date:** _____
QC: _____ **Date:** _____ **SPC (Y/N):** _____ **Date:** _____

Run Start *NR1*
Stop *NR2*

Sequence ID/ Work Center ID	Operation Description	Set Up/ Run Hours	Tool ID	Tool #	Plan Code	Accept Qty	Reject Qty	Reject Number	Insp. Stamp
160		0.00							
160	Packaging					DAS 27 9-89			
Packaging	**Memo**	0.00							
Packaging	Identify and pack for shipping as per PPP D350-604-041 Location: Fg103 PPP Rev:								
						SEP 2 1 2017			
170	QC21- Final Inspection - Work Order Release	0.00							
170							17/9/25		
QC	**Memo**	0.02							
Quality Control									

um 17/9/25

DART AEROSPACE

DQA: _____ Date: _____

WORK ORDER NON-CONFORMANCE / UPDATE

QA Closed: Date:

Work Order update only ☐

Work Order: _____ Part No. _____ NCR No.	**DISPOSITION** Rework ☐ Scrap ☐ Use-as-is ☐ Suspected Unapproved ☐	**AGAINST DEPARTMENT/PROCESS** Skid-tube ☐ Cross tube ☐ Water Jet ☐ Engineering ☐ Machining ☐ Small Fab ☐ Prod. Eng. Coor. ☐ Quality ☐ Thermoforming ☐ Finishing ☐ Rec/Store/Packaging ☐ Other ☐ Large Fab ☐ Composite ☐ Supplier ☐

Date :	Step #:	QTY Effective :	MRB (QSI042) Approval

Description Work Order Deviation	Disposition	
		Completed By
		Lead hand / Supervisor Approval Verification
		QC / QA Coordinator Approval

Root Cause				FAULT CATEGORY			
Environment	☐	☐	No Re-verfication	☐ Pressure/Forced	☐ Temperature/Cure	☐ Power Loss/Surge	☐ Positioned Wrong
Design	☐	☐	Operator	☐ Bending	☐ Set-up	☐ Folio/Program	☐ Outside Dimensions
Doc/Data	☐	☐	Offset/Setup	☐ Centre Not Concentric	☐ BOM/Route	☐ Grain	☐ Over/Under tolerance
Equip/Tooling	☐	☐	Supplier	☐ Cracks	☐ Broken/Damage/Defect	☐ Weld	☐ Part Incorrect
Handling/Pre	☐	☐	Training	☐ Crimp/Kink/Ripple/Wave	☐ Inspection Incomplete/Unqualified	☐ Wrong Stock Pulled	☐ Part Lost/Missing
Material	☐	☐	Use for Testing	☐ Cuffs	☐ Contamination	☐ Out of Sequence	☐ Part Moved
Internal Transport	☐	☐	Poor Information	☐ Crushing	☐ Countersink	☐ Off-set	☐ Drawing
Tribal Knowledge	☐	☐	Rushing	☐ Heat Treat	☐ Cut Too Short	☐ Mislabeled	☐ Finish
LOA	☐	☐	Product Improvement	☐ Wave/Twist in Tube	☐ Instructions Incomplete/Unclear	☐ Fit/Function	☐ Misread
Substation	☐	☐	Process Improvement	☐ Marks/Chatter	☐ Drill Holes	☐ Misaligned/off center	☐ Turning Sequence
Past Expiry Date	☐	☐	Manufacturing Process				
Misidentified	☐	☐	Past Due	☐ OTHER :			

Picklist Print

Monday, January 09, 2017 11:29:56 AM

2

Work Order ID: 155142

155142

Parent Item: D350-604-041

D350-604-041

Parent Item Name: Rear Locker Extender

Start Date: 8/1/2017 **Required Date:** 9/1/2017

Start Qty: 1.00 **Required Qty:** 1.00

Comments: IPP Rev:Q03.12.01ReformatKJ/RF IPP REV:R 12.02.07 AS PER ECN12-521 DD verf:JLM IPP REV:S 12.04.04 AS PER DWG REV.B DD VERF:EC IPP REV:T 13.09.12 as per CHG006/ECN13-616 DDVERF:JLM IPP REV:U 14.05.28 as per chg008/ecn14-563 DD verf:JLM IPP REV:V 15.03.13 remove cam lock and washerDD verf:JLM IPP REV:W 15.03.25 ECN15-545 DD VERF:JLM

Component Item ID/ Item Name	Replacement Item ID	Mfg/ Purch	Bin Item	Primary Location	Last Location	Route Seq ID	Unit of Measure	Qty on Hand	Qty per Kit	Total Qty	Qty Issued	Date Issued	Status
D350-604-041P		Purchased	No			110	Each	0.0000	1	1			
D350-604-041P									**	1x SP17-9-18.			
Rear Locker Extender													
D2268		Manufactured	No			140	Each	13.0000	1	1			
D2268									**				
Placard													
				Location			**Loc Qty**		**Loc Code**				
				ST006			13		B157834	1		SEP 2 1 2017	
					147069		7		6/13/2017				
					148553		6		7/22/2017				
D2728-1		Manufactured	Yes			140	Each	-1.0000	1	1			
D2728-1									**				
Dart Logo Label Small													
D2269		Manufactured	No			155	Each	8.0000	1	1		SEP 2 1 2017	
D2269									**				
Placard													
				Location			**Loc Qty**		**Loc Code**				
				ST006			8		B164004	1			
					147070		2		6/13/2017			SEP 2 1 2017	
					148588		6		7/22/2017				

DAS 27 9-89

DAS 28 9-89

DAS 28 9-89

DAS 27 9-89

DART AEROSPACE

DQA: _____ Date: _____

WORK ORDER NON-CONFORMANCE / UPDATE

QA Closed: Date:

Work Order update only ☐

Work Order: _____ Part No. _____ NCR No.	**DISPOSITION** Rework ☐ Scrap ☐ Use-as-is ☐ Suspected Unapproved ☐	**AGAINST DEPARTMENT/PROCESS** Skid-tube ☐ Cross tube ☐ Water Jet ☐ Engineering ☐ Machining ☐ Small Fab ☐ Prod. Eng. Coor. ☐ Quality ☐ Thermoforming ☐ Finishing ☐ Rec/Store/Packaging ☐ Other ☐ Large Fab ☐ Composite ☐ Supplier ☐

Date :	Step #:	QTY Effective :	**MRB (QSI042) Approval**
Description Work Order Deviation		**Disposition**	
			Completed By
			Lead hand / Supervisor Approval Verification
			QC / QA Coordinator Approval

Root Cause				**FAULT CATEGORY**			
Environment	☐	☐	No Re-verfication	☐ Pressure/Forced	☐ Temperature/Cure	☐ Power Loss/Surge	☐ Positioned Wrong
Design	☐	☐	Operator	☐ Bending	☐ Set-up	☐ Folio/Program	☐ Outside Dimensions
Doc/Data	☐	☐	Offset/Setup	☐ Centre Not Concentric	☐ BOM/Route	☐ Grain	☐ Over/Under tolerance
Equip/Tooling	☐	☐	Supplier	☐ Cracks	☐ Broken/Damage/Defect	☐ Weld	☐ Part Incorrect
Handling/Pre	☐	☐	Training	☐ Crimp/Kink/Ripple/Wave	☐ Inspection Incomplete/Unqualified	☐ Wrong Stock Pulled	☐ Part Lost/Missing
Material	☐	☐	Use for Testing	☐ Cuffs	☐ Contamination	☐ Out of Sequence	☐ Part Moved
Internal Transport	☐	☐	Poor Information	☐ Crushing	☐ Countersink	☐ Off-set	☐ Drawing
Tribal Knowledge	☐	☐	Rushing	☐ Heat Treat	☐ Cut Too Short	☐ Mislabeled	☐ Finish
LOA	☐	☐	Product Improvement	☐ Wave/Twist in Tube	☐ Instructions Incomplete/Unclear	☐ Fit/Function	☐ Misread
Substation	☐	☐	Process Improvement	☐ Marks/Chatter	☐ Drill Holes	☐ Misaligned/off center	☐ Turning Sequence
Past Expiry Date	☐	☐	Manufacturing Process				
Misidentified	☐	☐	Past Due	☐ OTHER :			

Picklist Print

Monday, January 09, 2017 11:29:56 AM

Work Order ID: 155142

155142

Parent Item: D350-604-041

D350-604-041

Parent Item Name: Rear Locker Extender

Start Date: 8/1/2017 **Required Date:** 9/1/2017

Start Qty: 1.00 **Required Qty:** 1.00

D5062-041	Manufactured	No	155	Each	16.0000	1	1	

D5062-041

Bracket Assembly

**

DAS 28 9-89

SEP 2 1 2017

Location	Loc Qty	Loc Code
ST147	16	
145920	16	

DAS 27 9-89

DART AEROSPACE

DQA: _____ Date: _____

WORK ORDER NON-CONFORMANCE / UPDATE

QA Closed: Date:

Work Order update only ☐

Work Order: _____ Part No. _____ NCR No.	**DISPOSITION** Rework ☐ Scrap ☐ Use-as-is ☐ Suspected Unapproved ☐	**AGAINST DEPARTMENT/PROCESS** Skid-tube ☐ Cross tube ☐ Water Jet ☐ Engineering ☐ Machining ☐ Small Fab ☐ Prod. Eng. Coor. ☐ Quality ☐ Thermoforming ☐ Finishing ☐ Rec/Store/Packaging ☐ Other ☐ Large Fab ☐ Composite ☐ Supplier ☐

Date :	Step #:	QTY Effective :	MRB (QSI042) Approval

Description Work Order Deviation	Disposition	
		Completed By
		Lead hand / Supervisor Approval Verification
		QC / QA Coordinator Approval

Root Cause				FAULT CATEGORY			
Environment	☐	☐	No Re-verfication	☐ Pressure/Forced	☐ Temperature/Cure	☐ Power Loss/Surge	☐ Positioned Wrong
Design	☐	☐	Operator	☐ Bending	☐ Set-up	☐ Folio/Program	☐ Outside Dimensions
Doc/Data	☐	☐	Offset/Setup	☐ Centre Not Concentric	☐ BOM/Route	☐ Grain	☐ Over/Under tolerance
Equip/Tooling	☐	☐	Supplier	☐ Cracks	☐ Broken/Damage/Defect	☐ Weld	☐ Part Incorrect
Handling/Pre	☐	☐	Training	☐ Crimp/Kink/Ripple/Wave	☐ Inspection Incomplete/Unqualified	☐ Wrong Stock Pulled	☐ Part Lost/Missing
Material	☐	☐	Use for Testing	☐ Cuffs	☐ Contamination	☐ Out of Sequence	☐ Part Moved
Internal Transport	☐	☐	Poor Information	☐ Crushing	☐ Countersink	☐ Off-set	☐ Drawing
Tribal Knowledge	☐	☐	Rushing	☐ Heat Treat	☐ Cut Too Short	☐ Mislabeled	☐ Finish
LOA	☐	☐	Product Improvement	☐ Wave/Twist in Tube	☐ Instructions Incomplete/Unclear	☐ Fit/Function	☐ Misread
Substation	☐	☐	Process Improvement	☐ Marks/Chatter	☐ Drill Holes	☐ Misaligned/off center	☐ Turning Sequence
Past Expiry Date	☐	☐	Manufacturing Process				
Misidentified	☐	☐	Past Due	☐ OTHER :			

SHOP COPY
RETURN TO
ENGINEERING
UNCONTROLLED COPY
SUBJECT TO AMENDMENT
WITHOUT NOTICE
WORK ORDER
NO. 155142 MLJ
17-01-12

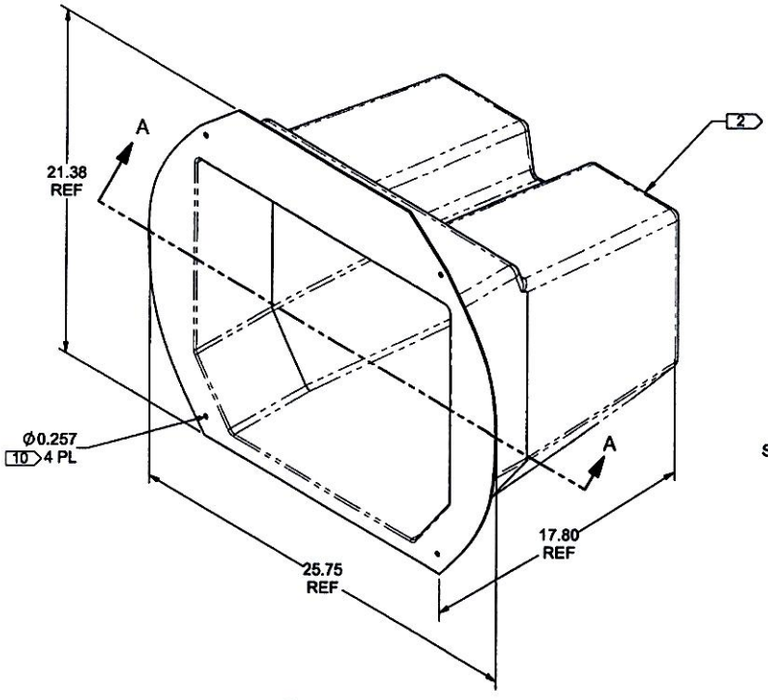

D2273 REAR LOCKER EXTENDER

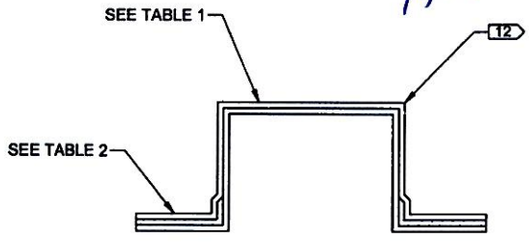

SECTION A-A

TABLE 1

POSITION	MATERIALS
1	TOOL SURFACE
2	GELCOAT
3	3/4 oz CHOPPED STRAND MAT
4	7725 FIBER GLASS
5	7725 FIBER GLASS
9	7725 FIBER GLASS
10	PRIMER

TABLE 2

POSITION	MATERIALS
1	TOOL SURFACE
2	GELCOAT
3	3/4 oz CHOPPED STRAND MAT
4	7725 FIBER GLASS
5	7725 FIBER GLASS
6	7725 FIBER GLASS
7	7725 FIBER GLASS
8	7725 FIBER GLASS
9	7725 FIBER GLASS
10	PRIMER

TABLE 3

MATERIAL USED	DESCRIPTION
GELCOAT	55X3535 WHITE GELCOAT
FIBER GLASS MAT	OWENS CORNING 3/4 oz CHOPPED STRAND MAT
FIBER GLASS CLOTH	HEXCEL 7725 FIBER GLASS
RESIN SYSTEM	DION 7704
PRIMER	TEMPO 4500-PB-23G (GREEN)

NOTES:
1) MATERIAL: SEE TABLE 3
2) FINISH: SEE TABLES 1, 2, & 3
3) TOLERANCES: PER DART QSI 018 UNLESS OTHERWISE NOTED
4) UNITS: INCHES UNLESS OTHERWISE NOTED
5) BREAK SHARP EDGES: 0.005 TO 0.010 MAX
6) IDENTIFICATION: IDENTIFY PER QSI 044 6.1
7) WEIGHT: 5.5~ 7.5 lbs
8) LAMINATE PER DART QSI 006. LAMINATION SCHEDULE PER THIS DRAWING
9) LAYUP USING DT9871 MOLD. WET LAYUP WITH BAG/VACUUM
10) TRIM & DRILL PER DT9905. OPEN HOLES TO Ø0.257
11) CONSTRUCTION: SEE TABLES 1 & 2
12) MATTE TO HOLD DOWN CORNERS AS REQUIRED

RELEASED
2017 -01- 11
ECN 17-501

REV.	DESCRIPTION	BY	DATE
M	CHANGE GELCOAT TO 55X3535 WHITE GELCOAT, REMOVE PAINT FINISH OPTION (NOTE 2)	DB	16.05.19
L	ADD PAINT OPTION (NCR 15-5408)	CP	15.10.19
K	LAYUP AND MAT'L PER FDC COMPOSITES PROCESS	CP	15.03.12
J	CHANGED GELCOAT TO 4314-001 DURA FR WHITE	ML	13.12.10
I	CHANGE GELCOAT TO POLYCOR 2330PAWK745	SFM	13.08.13
H	CHANGE MATERIAL & MANUFACTURING PROCESS	DC	13.03.15
G	ADD MANUFACTURING OPTION B, ZN B5-1	DC	12.08.08
F	PRIMER LE 3404-S/LE 1175-S WAS 1144-S, ZN A8-1	DC	12.02.27
E	CHANGED SURFACE FINISH FROM 944W005 GELCOAT TO 2330PAWK745 GELCOAT, ZN A7-1. UPDATED DWG TO CURRENT STANDARDS.	DC	12.02.02
D	REMOVE EPOCAST, ADD SURFACE FINISH	CP	02.04.01
C	CLARIFY MATERIAL, LAYUP, AND TOOLING	RF	02.01.30
B	RE-DRAWN	MM	96.05.27

DESIGN	JB	**DART AEROSPACE LTD** HAWKESBURY, ONTARIO, CANADA
DRAWN	DB	
CHECKED	ML	DRAWING NO. D2273 — REV. M — SHEET 1 OF 1
MFG. APPR.	DD	
APPROVED	WM	TITLE: 350 REAR LOCKER EXTENDER — SCALE: NTS
DE APPR.	DS	
DATE	16.05.19	

APPROVED

ITEM NO.	QTY. -041	PART NUMBER	DESCRIPTION
	X	D350-604-041	REAR LOCKER EXTENDER ASSEMBLY
1	1	D2268	PLACARD
2	1	D2273	REAR LOCKER EXTENDER
3	4	2600-6	CAMLOCK STUD
4	4	2600-LW	RETAINING WASHER

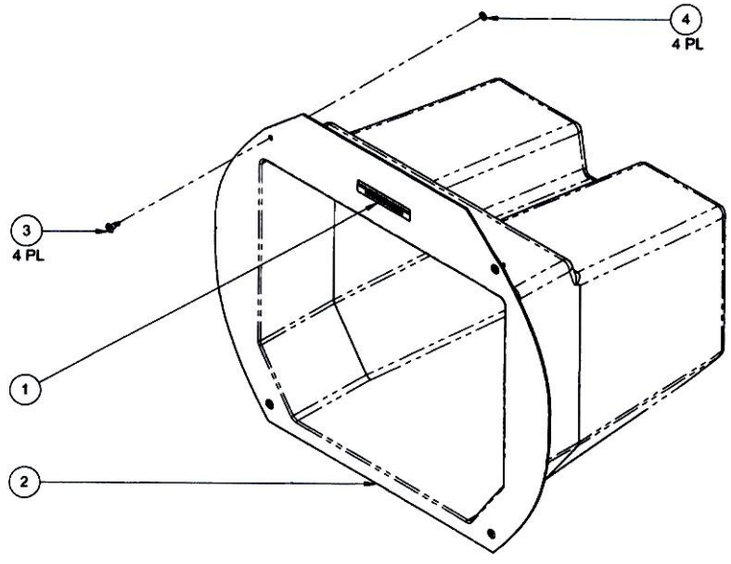

UP

RELEASED
2014 -01- 06

D350-604-041 REAR LOCKER EXTENDER ASSEMBLY

NOTES:
1) MATERIAL: N/A
2) FINISH: N/A
3) TOLERANCES: PER DART QSI 018 UNLESS OTHERWISE NOTED
4) UNITS: INCHES UNLESS OTHERWISE NOTED
5) BREAK SHARP EDGES: 0.005 TO 0.010 MAX
6) IDENTIFICATION: NONE
7) WEIGHT: 5.5 to 7.5 lbs
8) INSTALL D2268 PLACARD IN LOCATION SHOWN, CENTERED ON FLANGE

REV.	DESCRIPTION	BY	DATE
C	REMOVE D2728-1, D2729-1 DECALS (ZN C5-1) REVISED RELATED NOTES, UPDATED PART WEIGHT	ML	13.12.16
B	INCORPORATE DSI 9470 (ZN D7-1), UPDATE DWG TO CURRENT STANDARDS. ADD D2728-1 PLACARD AND ORIENTATION NOTE (ZN C3-1). ADD D2729-1 (ZN C5-1).	DC	12.02.07
A	NEW ISSUE	CP	02.04.01

APPROVED

DESIGN	DW	DART AEROSPACE LTD HAWKESBURY, ONTARIO, CANADA
DRAWN	ML	
CHECKED	AP	DRAWING NO. D350-604-041 — REV. C — SHEET 1 OF 1
MFG. APPR.	JLM	
APPROVED	MP	TITLE: RLE ASSY — SCALE: NTS
DE APPR.	DS	
DATE	14.01.02	

Change Record

Part Number: D350-604-041

Description: REAR LOCKER EXTENDER

CHG #	DATE	BY	RELEVANT DOCUMENTS	ECN #
001	99.08.12	CS/KE	D350-604 REV B, D2268, D2269, D2273 REV B	
002	09.07.15	KJ	DSI 9470 REV A	09-626
003	12.02.06	KJ	D2273 REV E	12-521
	12.02.22	KJ	D350-604 REV C, ICA-D350-604 REV 0	12-531
004	12.03.29	KJ	D350-604-041 REV B, D2273 REV F, ICA-D350-604 REV 1	12-540
005	13.04.18	KJ	D350-604 REV D, D2273 REV H, ICA-D350-604 REV 2	13-551
006	13.09.11	KJ	D2273 REV I, MDL-D350-604 REV E	13-616
007	14.01.09	KJ	D350-604-041 REV C, D2273 REV J	13-702
008	14.05.28	KJ	DSI 9698 REV A, D5062 REV A, MDL-D350-604 REV G	14-563
009	15.03.24	KJ	D2273 REV K, MDL-D350-604 REV H	15-545
010	17.01.11	KJ	MDL-D350-604 REV J, ICA-D350-604 REV 3, D2273 REV M,	17-501
			TP-D350-604-1 REV I, TR-D350-604-1 REV G	

Dart Aerospace Ltd.
1270 Aberdeen Street
Hawkesbury, ON K6A 1K7
Tel: 613 632 9577
Fax: 613 632 1053

PURCHASE ORDER

Purchase Order ID PO34974

Purchase Order Date 1/17/2017 9:06:51 AM
PO Print Date 1/31/2017

Order From : VC-FDC01

FDC COMPOSITES INC.
45 CHEMIN DE L'AEROPORT
LOCAL 26
ST-JEAN-SUR-RICHELIEU, QUEBEC J3B 7B5

Ship To : DART AEROSPACE LTD

1270 ABERDEEN
HAWKESBURY, ON K6A 1K7
CANADA

Contact Name
Vendor Phone 450-357-1344 ext303

Ship To Contact
Ship To Phone
Ship Via: Journey Freight collect
Ship Acct:

Buyer Chantal Lavoie
Customer POID
Customer Tax # 10127-2607
Terms Net 30
Currency CAD
FOB Destination-Collect

3	D350-604-041P	Rear Locker Extender	9/1/2017 Yes 9/1/2017	1.00 Each		$705.00	$705.00

AS PER DWG D2273 REV. M / D350-604-041 REV. C
B155140
PLEASE NOTE REARLOCKER UNDER NEW REV. M

Line Total: **$705.00**

4	D350-604-041P	Rear Locker Extender	9/1/2017 Yes 9/1/2017	1.00 Each		$705.00	$705.00

AS PER DWG D2273 REV. M / D350-604-041 REV. C
B155141
PLEASE NOTE REARLOCKER UNDER NEW REV. M

Line Total: **$705.00**

5	D350-604-041P	Rear Locker Extender	9/1/2017 Yes 9/1/2017	1.00 Each		$705.00	$705.00

AS PER DWG D2273 REV. M / D350-604-041 REV. C
B155142
PLEASE NOTE REARLOCKER UNDER NEW REV. M

SPA 9-18

PO Instructions: NOTE: NO BILLING PRIOR TO SHIPPING

Note:

FDC Composites inc.
45, Chemin de L'Aéroport
Local 26
Saint-Jean-sur-Richelieu (QC)
J3B 7B5 *Tel.:* 450 357-1344

Shipping Order

29/08/2017

Order : 2676
Reference : PO 34974/1-5

Customer: DAE-CAD

Dart Aerospace ltd.
1270 Aberdeen Street
Hawksbury, ON
K6A 1K7

Ship To
Dart Aerospace
1270 Aberdeen Street
Hawksbury, ON
K6A 1K7 *Tel.:* 1 613 632-9577

Item No.	*Description*	*Qty.*	*Qty. Delivere*	*B/O Qty*
D350-604-041P	REAR LOCKER EXTENDER PO item: 34974/5 FDC ID: DAE001-120 Lot: 2017-02-28 ~~As per DWG:~~D2273 Rev. M B155142 CAD CURRENCY NET 30 DAYS	1	_____	_____

2017-9-18

Page : 2

Shipping : _____ ***Ref.*** : _____
Package No : _____ _____
Merchandise Received: _____

FDC COMPOSITES INC.
FDCcomposites.com

CERTIFICATE of CONFORMITY

Customer Name: Dart Aerospace.

Customer P/O Number: 34974

Revision: NC

PO Item	Qty	Part number	Dwg number	Description	Dart ID	FDC ID	Lot
1	1	D350-604-041P	D2273 Rev M	350 Rear Locker Extender	B155138	DAE001-115	2017-02-23
2	1	D350-604-041P	D2273 Rev M	350 Rear Locker Extender	B155139	DAE001-116	2017-02-27
3	1	D350-604-041P	D2273 Rev M	350 Rear Locker Extender	B155140	DAE001-117	2017-02-18
4	1	D350-604-041P	D2273 Rev M	350 Rear Locker Extender	B155141	DAE001-119	2017-02-28
5	1	D350-604-041P	D2273 Rev M	350 Rear Locker Extender	B155142	DAE001-120	2017-02-28

I hereby certify that the workmanship, material and the processes used in the manufacture of the above part(s) supplied are in accordance with the requirements of the applicable Purchase Order.

Signature: Marjorie G
Marjorie Geoffrion, Quality Inspector

Date: 2017-08-28

5
17/07/20

45, chemin de L'Aéroport (H2), Local 26, Saint-Jean-sur-Richelieu (Québec) Canada J3B 7B5
Téléphone 450 357-1344 – Télécopieur 450 357-1194

FDC COMPOSITES INC.
FDCcomposites.com

Gamme de Fabrication

Nom de Gamme :	**Rear locker extender – DART**
# de Gamme (et rev.) :	DAE001 Rev. E
Nom pièce – Client :	350 Rear locker extender – DART AEROSPACE
# de Dessins (et rev.) :	D2273 Rev. J

# LOT	2017-02-28
# SÉRIE(ID)	**DAE001-** 120

ID: B155142

Fiche suiveuse

PLAGE (ÉTAPES)	DÉPARTEMENTS	DESCRIPTION GÉNÉRALE	DATE(HR) SORTIE
[10-60]	**Préparation**	Moule, Espace de travail, Matière premières, Consommables	23 FEV 2017 #23 #21 22 FEV. 2017
[70-90]	**Finition/Peinture**	Appliquer Gel coat, Inspecter	#3 28 FEV 2017
[100-150]	**Laminage**	Laminer, Démouler, Inspecter	#19 28 FEV 2017 #26 28 FEV 2017 #23 28 FEV 2017 #21 28 FEV 2017
[160-200]	**Usinage**	Percer, Découper, Ébavurer, Inspecter, Sabler	#30 9 MAR. 2017
[210-230]	**Finition/Peinture**	Primer, Inspection	#3 28 ~~AVR~~ MARS 2017
240	**Expédition**	Emballer, Expédier	#8 30 AOUT 2017

Gamme préparé par : Guillaume G.Jasmin
Gamme révisée par : Pascal Seguin
Gamme vérifiée par (Chefs d'équipe) :
Gamme approuvée par :
Date d'émission : 2017-02-20

Approbation Qualité

Avant de produire le CofC, toutes les étapes et les informations requises des gammes subséquentes reliées à ce produit ont été complétées et remplies

Inspecteur Qualité

Informations à remplir : Cases grises pâles **Inspection :** Cases grises foncées

Matières premières

Matériel Requis (Nom abrégé)	# de lot	Date d'expiration	Spécification et/ou identification
Résine	1028612	2018-05-17	Dion 7704
Norox (Résine)	411049	2017-08-01	MEKP-9
Norox (Gel coat)	411049	2017-08-01	MEKP-9
Gel coat blanc	702284	2017-03-20	55X-3535
Mat ¾ oz/pi²	5051100174-1	N/A	¾ oz Chopped Strand Mat (Owens Corning Or Equivalent)
Fibre de verre 7725	4294874	N/A	Hexcel 7725 Fiber Glass
Apprêt (Primer) (Vert)	18316	2018-05-01	Tempo 4500-PB-23G (Vert)
Durcisseur pour apprêt (hardener)	18317	2018-05-01	Tempo 4500-C-23
Attache mécanique (Camloc)	509970	N/A	2600-5
Rondelle de retenue pour Camloc	1745658	N/A	2600-LW

Équipement	Matériel auxiliaire	Santé et sécurité
Moule : **MOU306 ou MOU309**	FMS	Sarrau
Pompe à vide	55NC	Lunettes de sécurité
Jig de découpe et perçage : **GAB350**	Peel ply	Soulier de protection
Jig de finition et d'inspection : **GAB355**	Film perforé	Gants
	Bleeder breather	Masques à cartouches
Pince pour installer Camloc : **OUT951**	Bag big blue	
Outil pour installer rondelle de retenue : **OUT952**	Ruban scellant (Dum Dum)	

Documents auxiliaires
Annexe 1
Formulaire de résine (RES-DAR001)

MPS	Description
MPS-300-93-31-007-NC	Démoulage 55NC
MPS-300-93-31-058-A	Composite part inspection
MPS-300-93-31-020-B	Edge finish after trimming
MPS-300-93-31-097-NC	Epoxy - Polyamide primer
MPS-300-93-31-084-NC	Protection et entreposage des pièces

Suivi des révisions

# de révision	Contenu (et étape) de la révision	Date de révision	Révisé par :
A	Révision d'une OP inspection, Ajout nouveaux moules et retrait d'un type de primer	2015-03-04	Guillaume G.Jasmin
B	Ajout des conformateurs, du gabarit GAB355, de l'installation des camlocs, inspection du poids et identification finale	2015-03-25	Guillaume G.Jasmin
C	Mise à jour de la case approbation qualité page 1	2015-04-02	Guillaume G.Jasmin

Opération	Description	Références, outils et équipements	Date et Initiales
	Section A : PRÉPARATION		
10	Remplir les informations requises sur la première page (cases grises pâles) • Demander au coordonnateur de production (ID) • Inscrire les heures et les dates d'entrée et de sortie de département		#21 23 FEV. 2017 #23 22 FEV. 2017
20	Découper la fibre et les périssables (Peel ply, sac étanche…) selon l'**ANNEXE 1** • ACHEMINER et REMPLIR la section « Matière premières » pour : - Fibre de verre 7725 - Mat ¾ oz	Annexe 1	#21 23 FEV. 2017 #23 22 FEV. 2017
40	Préparer la résine selon RES-DAR001 (Gamme de formulation de résine) ACHEMINER et REMPLIR la section « Matière premières » pour : - Résine - Norox	RES-DAR001	#28 28 FEV. 2017
50	PRÉPARER le moule **- Cochez le moule utilisé : MOU306 ☑, MOU309 ☐** ☑ Nettoyer et traiter le moule ☑ Poser le Masking tape Si nécessaire, traiter le **moule** au 55NC • Faire le test de pelage, s'il ne passe pas, appliquer une couche de 55NC et refaire le test.	Annexe 1 **MOU306 ou MOU309** MPS-300-93-31-007	#26 27 FEV. 2017

60	PRÉPARER l'espace de travail (pendant l'application du gel coat) ☑ Vérifier et préparer la pompe ☑ Préparer et distribuer les outils ☑ Protéger l'environnement de travail (tables, plancher, etc.) ☑ Vêtir l'équipement de protection personnel ☑ Partir la ventilation ☑ Vérifier l'ordre et la présence de tous les plis de fibre et des morceaux de noyau dans le sac		#21 28 FEV. 2017 #23 28 FEV. 2017

Position	Matériel	Initial employé
10F	¾ oz Chopped strand MAT	Cloni NJ
20F	7725 Fibre de verre	Cloni NJ
30F	7725 Fibre de verre	Cloni NJ
40R	7725 Fibre de verre	Cloni NJ
50C	Noyau DIAB F40 1/8po	Cloni NJ
60R	7725 Fibre de verre	Cloni NJ
70R	7725 Fibre de verre	Cloni NJ
80F	7725 Fibre de verre	Cloni NJ

Section B : APPLICATION GEL COAT

70	**(GEL COAT)** : ACHEMINER et REMPLIR la section « Matière premières » pour : • Gel coat		#28 28 FEV. 2017
80	APPLIQUER le Gel coat (18 - 22 mils) Heure d'application: 08 h 33 min	Annexe 1	#3 28 FEV. 2017
90	**Point d'inspection (Inspecteur Qualité) :** ☑ **Épaisseur du gel coat : 18 - 22 mils** ☑ **Qualité de l'application du gel coat : Uniforme et esthétique.**		Inspecteur Qualité 2017-02-28

Section C : LAMINAGE

100	**Points d'inspection (Inspecteur Qualité ou Chef d'Équipe) :** ☐ **Donner l'approbation pour que la pièce puisse être laminée (le gel coat est « amoureux » ou « tack free »)**		Inspecteur Qualité 2017-02-28
110	LAMINER **Position** / **Matériel** 10F – ¾ oz Chopped strand MAT 20F – 7725 Fibre de verre 30F – 7725 Fibre de verre 40R – 7725 Fibre de verre 60R – 7725 Fibre de verre 70R – 7725 Fibre de verre 80F – 7725 Fibre de verre CONSOMMABLE 10F – Peel Ply 20F – Release film non perforé 30F – Bleeder / Breather 50F – Bagging bleu ☐ S'assurer que tous les plis dans le tableau ont été laminés ☐ S'assurer que tous les conformateurs (Qte 9) sont en place par-dessus le Bleeder/Breather Heure début laminage: 9 h 00 min Heure mise sous-vide (sac scellé): 9 h 45 min Intensité du vide (25 inHg): 23 inHg	Annexe 1 **GAB356** à **GAB364** (Qte 9)	#19 28 FEV. 2017 28 FEV. 2017 #26 #21 28 FEV. 2017 #23 28 FEV. 2017
120	LAISSER POLYMÉRISER la pièce sous vide pendant 2h #23 28 FEV. 2017 #26 28 FEV. 2017	#19 8 FEV 2017	N/A

130	DÉMOULER et IDENTIFIER la pièce ☑ Brancher le système d'air comprimé ☑ Écrire le numéro de pièce et la date sur un collant – # de lot (date de début) – # de série ID **Ex : (AAAAMMJJ) – (DAE001-XXX)** ☐ Découper une pellicule de plastique protecteur bleu et la coller sur le rebord et à l'intérieur de la partie blanche (Gel coat) (Voir Annexe 1) ☑ Placer la pièce sur la table d'inspection	Annexe 1	#26 28 FEV. 2017 #19 28 FEV. 2017
140	**Contrôle par inspecteur qualité** ☑ **Identifier la présence de surplus de résine** ☑ **Identifier la présence de bulles d'air** ☑ **Identifier la présence de zone sèche** ☑ **Identifier la présence de plis dans la fibre**	**MPS-300-93-31-058**	Inspecteur Qualité 2017-03-01
150	Nettoyer le moule • Enlever la résine durcie tout le tour du moule avec une spatule en plastique pour ne pas endommager le moule • **Si nécessaire**, nettoyer le moule avec un chiffon légèrement humecté de nettoyant à moule (PMC) NE PAS TROP APPLIQUER DE "PMC"	Spatule en plastique	#19 28 FEV. 2017 #26 28 FEV. 2017

Section D : USINAGE

160	**PERÇAGE ET DÉCOUPE :** INSTALLER le Gabarit de perçage et découpe PERÇER la pièce • Percer 4 trous avec un forêt F (Dia. .257 po) au travers des canons de perçage du Gabarit **GAB350** DÉCOUPER la pièce • Retirer le Gabarit de découpe une fois terminé	**GAB350** Annexe 1 Forêt F (Dia. .257 po)	#30 9 MAR. 2017
170	**SABLAGE :** INSTALLER le Gabarit de finition et d'inspection **GAB355** SABLER la pièce jusqu'à arriver à la dimension du Gabarit **GAB355** (voir Annexe 1) RETIRER le Gabarit	**GAB355** Annexe 1 MPS-300-93-31-020	N/A

	ÉBAVURER les arêtes vives		N/A
180	**Point d'inspection (inspecteur qualité) :** ☑ **Plier les flanges (rebords) afin de s'assurer que le Gel coat ne craque pas (Voir Annexe 1 pour ce test)** ☑ **Vérifier la conformité de la pièce (Dimensions) selon le no. de dessin et selon le MPS-300-93-31-058**	**Annexe 1 MPS-300-93-31-058**	Inspecteur Qualité 2017 03 16

190	SABLER légèrement l'extérieur de la pièce • Papier 120 à 320 grains		#26 14 MAR. 2017
200	NETTOYER les surfaces extérieures		#3 28 ~~AVR.~~ MARS 2017

Section E : FINITION/PEINTURE

210	APPLIQUER le primer • 2 couches d'environ 10 mils chacune	MPS-300-93-31-097	#3 28 ~~AVR.~~ MARS 2017
220	**INSTALLER les attaches mécaniques (Camlocs) (Qte 4) (voir Anne[redacted])** • Utiliser les pinces spécialisées (**OUT951**) pour insérer les Camlocs dans les trous • Utiliser l'outil spécialisé (**OUT952**) pour installer les rondelles de retenues	Annexe 1 Pince à [redacted]loc (**OUT951**)	2mai2017
230	**Inspection finale :** • **Validation de la finition (pinholes, surface inégale, etc...)** • **Vérifié s'il y a un panneau de contrôle relié à la pièce** • **Étamper le carré dans le coin inférieur droit de la première page** • **Identifier la pièce finale (voir Annexe 1) pour exemple et localisation** • **Poids de la pièce :** 6,6 **(LBS)**	**Annexe 1 MPS-300-93-31-058**	Inspecteur Qualité 2017 07 18

Section F : EXPÉDITION

240	Emballer et expédier	MPS-300-93-31-084	#8 30 AOUT 2017

Work Order ID 155142

Monday, January 09, 2017 11:29:53 AM

155142

Item ID: D350-604-041
Revision ID: URF 16-567
Item Name: Rear Locker Extender

Accept *N900040100*

Setup Start *NS1*
Stop *NS2*

Start Date: 8/1/2017 **Start Qty:** 1.00 *1*
Required Date: 9/1/2017 **Req'd Qty:** 1.00 *1*
Reference:

Cust Item ID:
Customer:

DAS 21 9-89

Approvals: **Process Plan:** DAS 21 9-89 **Date:** JAN 1 2 2017 **Tooling:** _____ **Date:** _____
QC: _____ **Date:** _____ **SPC (Y/N):** _____ **Date:** _____

Run Start *NR1*
Stop *NR2*

Sequence ID/ Work Center ID	Operation Description	Set Up/ Run Hours	Tool ID	Tool #	Plan Code	Accept Qty	Reject Qty	Reject Number	Insp. Stamp
Draw Nbr / **Revision Nbr**									
D2273 / ~~A U/R~~ M 07/01/12									
D350-604-041 / C U/R 11/1/11									
100	Document Control	0.00							DAS 5 9-89
100	DOCUMENT CONTROL								
DC	**Memo**	0.00				SEP 2 1 2017			
Doc.Control -USB or Paperwork	Photocopy bluefile and create labels per PPP D350-604-041 CHG009 CHG010 DAS 21 9-89 See attachment								
110		0.00							
110	PURCHASING								
Purchasing	**Memo**	0.00				JAN 1 7 2017			
Purchasing	Issue P/O: 34974 Description: D350-604-041 Rear locker extender. Manufacture as per dwg D2273 Supplier: FDC Composites Inc. Certification of Conformity and process sheet required. ***EXTREME CARE MUST BE TAKEN TO PROTECT THE SURFACES OF THE REAR LOCKER. THE SURFACES MUST BE SMOOTH AND FREE FROM SURFACE DEFECTS SUCH AS SCRATCHES, NICKS, OR DENTS.*** ***MUST BE WELL PACKAGE, IF NOT IT WILL BE REFUSE***								